Purification of Waste Water from Septic Tanks using Slow Sand Filters for Reuse and Recycling

Paschal Leonard[1] , Subira Munishi[1], Deus masige[2]
[1]Department of Water Resources Engineering, University of Dar es Salaam
[2]Global Water Partnership Tanzania

Introduction

- Wastewater management is becoming a critical problem over time in developing countries specifically in towns.
- On – site systems of wastewater treatment such as septic tanks and soak away pits have been used all over the world particularly in developing countries like Tanzania .
- On- site systems discharges wastewater above the permissible limits stipulated under TZS 860: 2006 directly into the ground resulting to ground water pollution.
- The use of conventional methods in treatment of wastewater to an acceptable standards before discharging into the environment adopted by most of the institutions has proven an increase in institution operation costs
.
- Also, the use of portable water for irrigation of gardens and flushing toilets has contributed greatly to generation of wastewater and has increased household and institution operational cost in terms of water bill

Study Objectives

To improve the effluent quality from septic tanks to an acceptable Discharge and reuse standards using low cost slow sand filter..

Materials and methods

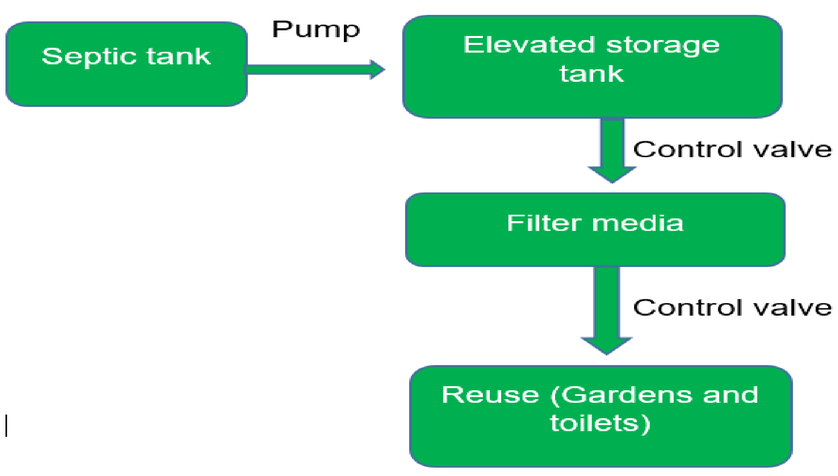

Flow diagram for wastewater filtration process.

Photo showing wastewater sample collection

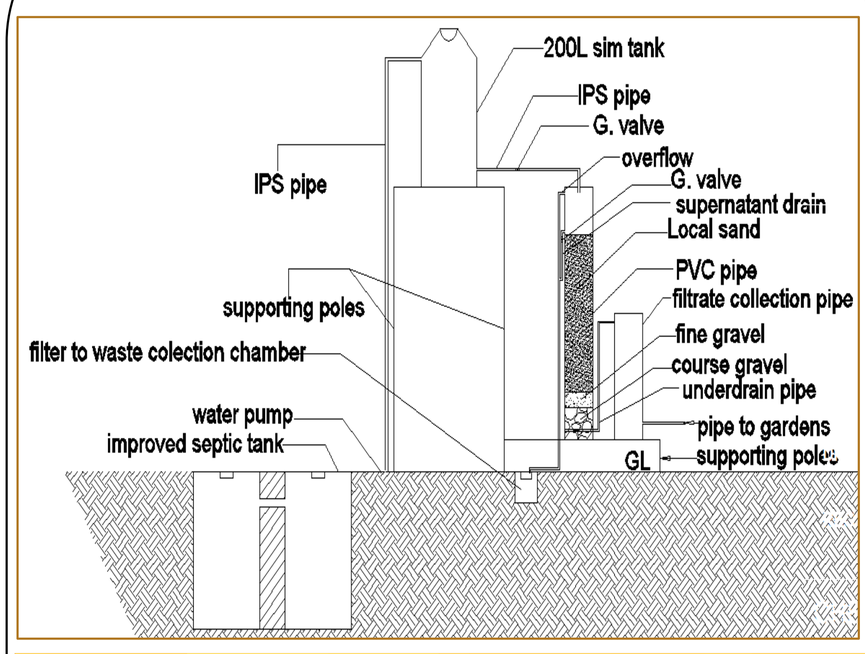

Schematic diagram of a slow sand filter.

Photos showing Experimental set up of a slow sand filter..

Photos showing Laboratory wastewater quality analysis.

Study findings

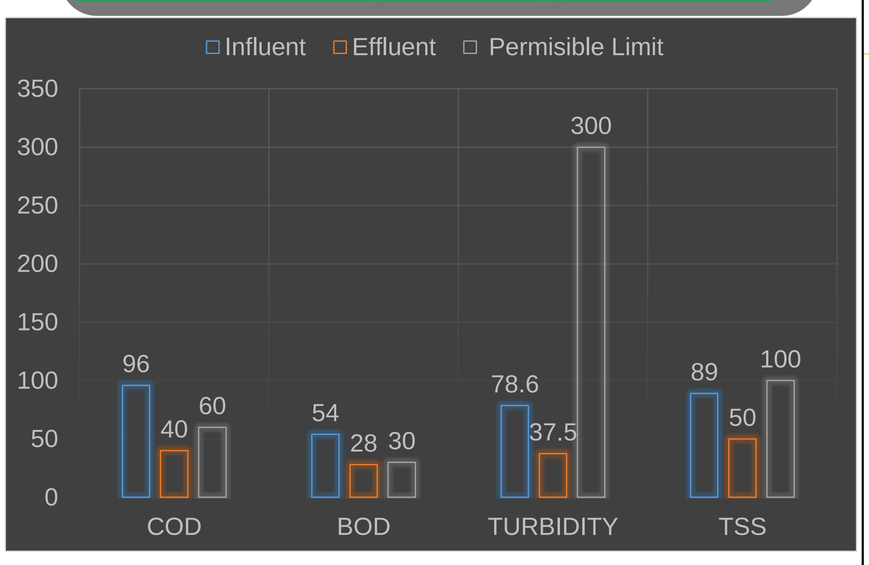

Influent and effluent quality against permissible limits(TZS 2006)

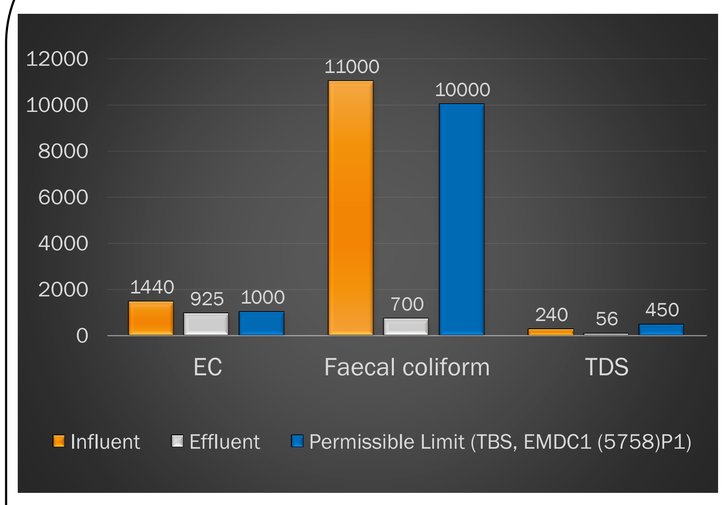

Influent and effluent quality against permissible limits(TBS, EMDC1(5758)P1)

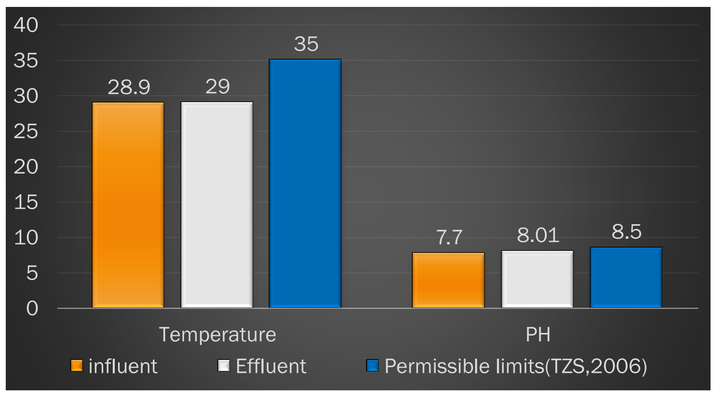

Influent and effluent quality against permissible limits(TZS 2006)

Conclusion & Recommendations

- The study found out that the septic tank effluent did not comply with some of the allowable TBS standards.
- It was further noted that the SSF designed and used to treat the effluent successfully purified the wastewater to the maximum allowable discharge and reuse standards..
- The SSF noted to be prone to frequent clogging if the septic Tank was not adequately designed. This however was solved through regular cleaning of the filter media.

References

1. TZS 860: 2006. Permissible limits for municipal and industrial wastewater
2. Ekha y. et al (2014)Study of a slow sand filtration in removing total coliforms and E.coli. *Jurnal sains dan teknologi lingkungan,* 6(2), 110 – 112.
3. Peace A. et al. (2011). *Wastewater management.* University of Ghana, Ghana, pp.384- 393.

Acknowledgement: Building Capacity in Water Engineering for Addressing SDG's in East Africa (CAWESDEA) Project – Internship Programme
Strengthening Engineering Ecosystem in Sub- Saharan Africa (IDRC Funded Programme - 2018-2021

Email; leonardpaschal02@gmal.com